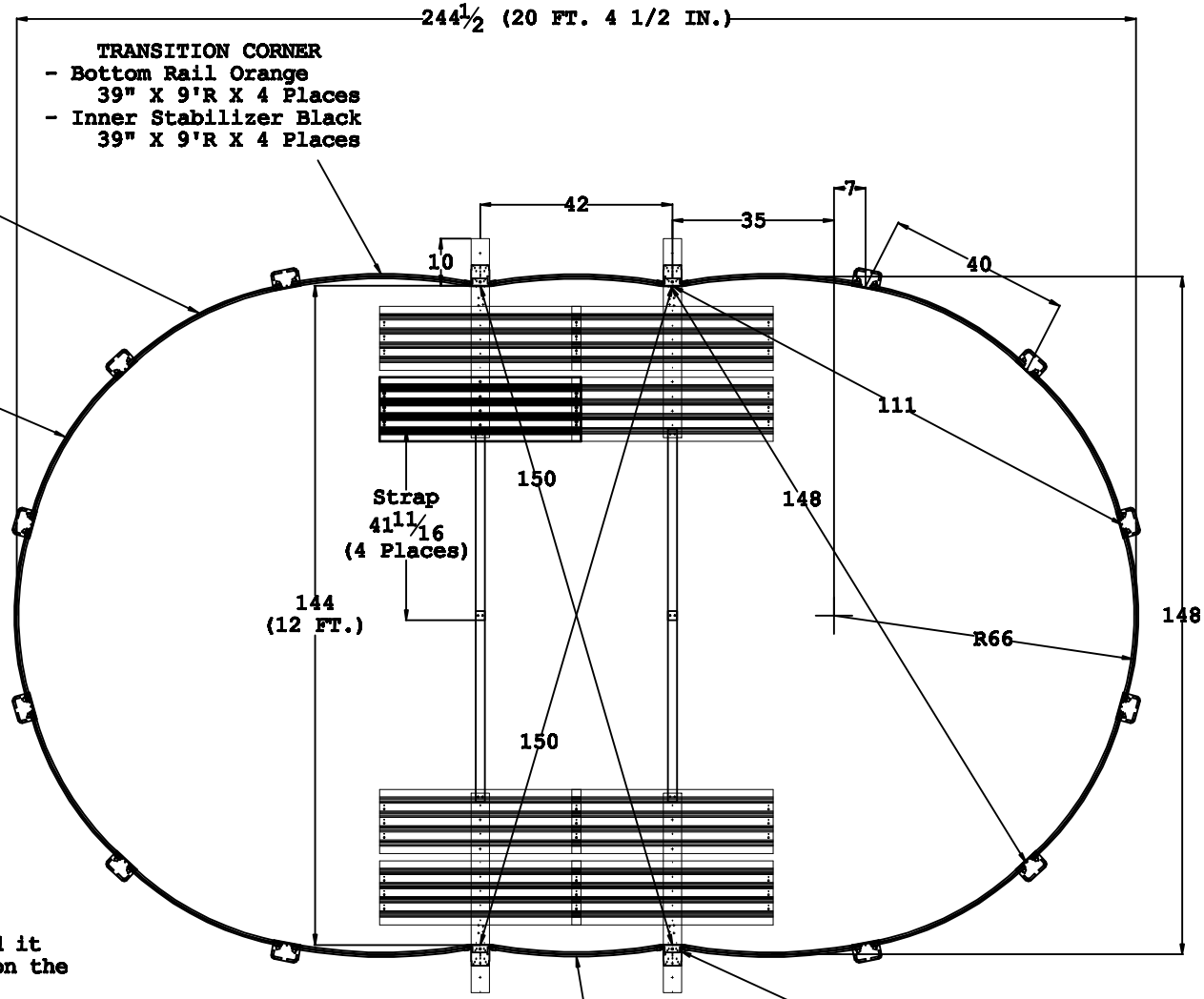

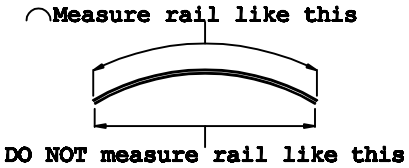

Notes:
1. Wall length is 659"
2. The bottom rail is approx 1" X 1" and it goes on the ground. The pool wall sits on the groove in the center of this part.
3. The Inner Stabilizer is approx 5/8" X 5/8" and is assembled on top of the pool wall.
4. The Bottom Rails and the Inner Stabilzers are color coded on the ends to indicate the radius of the part.
5. All dimensions are in inches unless otherwise specified.
6. All dimensions are referenced from the wall location.
7. Manufacturers tolerances and field condition may result in dimensional variations.

WILBAR GROUP

50 Cabot Court, Hauppauge, N.Y. 11788-3716

Tel: (631) 951.9800 - Fax: (631) 951.9170

Product: POOL FOOT PRINTS		
Model: 1220 SSS		
Drawn by: JCR	Scale: 1:40	Date: 8-23-12